COMPUTER SMART III

ADVANCED POWER FACTOR CONTROLLER





Contents

Advanced PF correction	04
Computer SMART III Advanced Power Factor controller	05
Main features 3 in 1	06
Where to install Computer SMART III	08
Technical specifications	09
References	09

Advanced PF correction



Power quality and energy efficiency are critical factors in maximising the performance and competitiveness of any electrical installation. Power factor controllers ensure the optimum operation of capacitor banks by automatically switching capacitor stages according to load demand, maintaining the desired power factor, avoiding utility penalties and improving the overall energy efficiency of the installation.

The **Computer SMART III** has been designed to deliver accurate and dynamic reactive power compensation, adapting in real time to actual load requirements through a measurement system equivalent to the utility billing meter. Beyond conventional power factor control, it incorporates advanced monitoring and power analysis functions that provide full visibility of the electrical installation, helping to identify potential issues, support preventive maintenance strategies and improve system reliability while reducing operating costs.

Computer SMART III

Advanced Power Factor controller



Measurement equivalent to the billing energy meter

Measurement with three current transformers guarantees an accurate reading equivalent to the utility meter. This feature allows the system to measure the total current in real time, preventing penalties caused by overcompensation or undercompensation compared to traditional methods based on a single CT measurement.

It also provides the functions of an integrated power analyzer and enables control of residual leakage currents to ensure the system and people protection.



Computer SMART III

› OPTIM P&P
› OPTIM FR P&P



Computer SMART III Fast

› OPTIM EMK
› OPTIM FRE

Compensation based on real needs

Control of electrical parameters and consumption

Easy preventive maintenance and maximum safety

Plug & Play

Main features
3 in 1

COMPENSATION

- Smart compensation
- Measurement in 1 or 3 phases
- 4 target cos φ values
- Configurable alarms
- Communications
  Modbus RTU/RS-485
- Allows independent configuration of each step.

ANALYSIS

- Not only is SMART III an advanced Power Factor controller, but it is also a powerful PF controller that measures the consumption and electrical parameters of the installation.

RESIDUAL CORRENT PROTECTION

- Computer SMART III uses Circutor's unique leakage measurement system, which facilitates the disconnection of the affected capacitor and guarantees the service continuity of the rest of the capacitor bank.

Communications

Scout_VAR System

Monitoring the performance of
your capacitor bank & power factor

Capacitor banks are essential to correct a low power factor in your installation. The VAR module ensures optimal performance and keeps the power factor within the appropriate levels, helping to avoid penalties and improving energy efficiency.

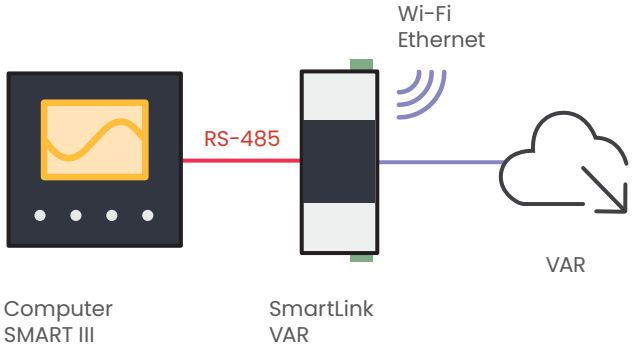

4 cos φ objective

First PF controller in the market with a configuration of up to 4 objective cosφ with 2 digital inputs (for applications with differences in time periods or with a generating set).

Simplification of fixed compensation operations

The ON/OFF/AUTO configuration of each one of the steps of the automatic capacitor bank can be used to select a step for the fixed compensation of the power transformer, not considering the value of this step when compensating all other loads.

This means that a fixed set that is independent of the automatic capacitor bank does not have to be installed.

Adapted to any need

Connecting 1 or 3 transformers allows the following:

- Plug & Play
- Changing from 1 to 3 transformers in the following cases:
  - Changes in reactive energy penalties
  - Changes in consumption habits
  - Significant unbalances in the system
- Replacement of the Power Factor controller of any capacitor bank.

Alarms & Supervision

17 configurable alarms that improve preventive maintenance

Harmonic Alarm

Indicates the risk of the presence of harmonics in the installation, programming the connection or disconnection of capacitors to eliminate resonance.

Capacitor supervision

The [test] function checks capacitors for a quick analysis of their power. It prevents the use of external power analyzers, current sensing clamps, etc.

Operations Alarm

The alarm for the number of operations per step warns of the need to implement preventive actions.

Temperature Alarm

The built-in controller and thermostats can configure the temperature alarms, avoiding the installation of external units.

Where to install Computer SMART III

The **Computer SMART III** ensures optimal capacitor bank performance in any electrical installation. Its retrofit-friendly design allows seamless integration into existing systems, helping avoid reactive energy penalties while maximising energy efficiency. Beyond power factor correction, the built-in power analyzer delivers comprehensive visibility of key electrical parameters, making it easier to audit, monitor and optimise the installation's performance.



Tertiary sector



Buildings



Industry



Infrastructure



Hotels



Malls & Supermarkets

Technical specifications

Power supply	Nominal voltage	110...520 VAC (SMART III 14 -> 100...400 VAC)
	Frequency	45... 65 Hz
Voltage measurement circuit	Nominal voltage (U_n)	230 VAC ph-n, 400 VAC ph-ph
	Voltage measurement range	20...300 VAC ph-n, 35...520 VAC ph-ph
	Frequency measurement range	45... 65 Hz
Current measurement circuit	Nominal current (I_n)	.../1 A or .../5 A
	Current measurement margin	1...120% I_n
Measurement circuit for leakage current	Secondary nominal current	3 mA
	Current measurement margin	10 mA ... 1.5 A
	Minimum current measurement (I_{start})	10 mA
Measurement accuracy	Voltage measurement	0.5% ± 1 digit
	Current measurement	0.5% ± 1 digit
	Active energy measurement	0.5% ± 2 digits
	Reactive energy measurement	1% ± 2 digits
Communications	Protocol	Modbus RTU
	Intermediate	RS-485
Environmental characteristics	Operating temperature	-20...+60°C
	Relative humidity (without condensation)	5 ... 95%
	Maximum altitude	2000 m
	Protection rating	IP 51 mounted / IP 31 not mounted
Mechanical characteristics	Dimensions	144 x 144 x 71mm
	Weight	575 g
	Enclosure	Self-extinguishing V0 plastic
	Mounting	Panel
Standards	EN 55022; EN 55016-2-1; EN 61000-4-2; EN 61000-4-4; EN 61000-4-5; EN 61000-4-6; EN 61000-4-8; EN 61000-4-11; EN 61000-4-20; EN 61010-1; EN 61010-2-030.	

References

Model	Code	Supply	No. of outputs	Switching	Communications
Computer SMART III 6	R13851.	110... 520 VAC	6	Contactor	Modbus RS-485
Computer SMART III 12	R13862.	110... 520 VAC	12	Contactor	Modbus RS-485
Computer SMART III 14	R13882.	110... 400 VAC	14	Contactor	Modbus RS-485
Computer SMART III Fast 6	R13951.	110... 480 VAC	6	Thyristor	Modbus RS-485
Computer SMART III Fast 12	R13962.	110... 480 VAC	12	Thyristor	Modbus RS-485





Partnering with

Circutor

Leading electrical energy efficiency company, creating innovative technological solutions for our clients, in the field of global energy transition since our foundation in 1973.

circutor.com

1300 556 601
customerservice@ipd.com.au
ipd.com.au